Cadex

PARTS LIST FOR CS82.16PS

ITEM	DESCRIPTION
00.04	O-RING
00.06	O-RING
00.12	O-RING
00.13	O-RING
00.14	O-RING
00.26	O-RING
00.27	O-RING
00.35	O-RING
01.21.1	GASKET
01.21.3	GASKET
01.29	O-RING
01.33	O-RING
04.08	SCREW
04.12	SCREW
04.14	SCREW
04.20	SCREW
04.35	SCREW
07.30	HEX.BAR WRENCH
09.02	ELASTIC RING
09.14	WASHER
14.18.1	PIN
17.10	AIR PLUG 1/4”
20.00	BODY
22.07	HEAD
24.00	SILENCER
25.04	EXHAUST DEFLECTOR
26.07.1	CYLINDER
28.00	GASKET
30.07.3	PISTON
32.05.2	BUMPER
39.00	EXHAUST GASKET
40.04.2	VALVE ASS’Y
45.04	RING
50.03	TRIGGER VALVE ASS’Y
52.02	BUSH
54.04	TRIGGER VALVE
55.06.1	BUSH
72.03	SUPPORT
75.04	SAFETY
76.04	PIN
76.45	PIN
80.08	TRIGGER
81.16	TRIGGER
90.07	SPRING
91.07	SPRING
91.08	SPRING
92.01X	SPRING
93.02	SPRING
22.00.82	DRIVER
53.00.80	MAGAZINE
62.00.82	SLIDER
70.00.82	PUSHER
81.00.82	NOSE
91.01.82	NOSE PLATE

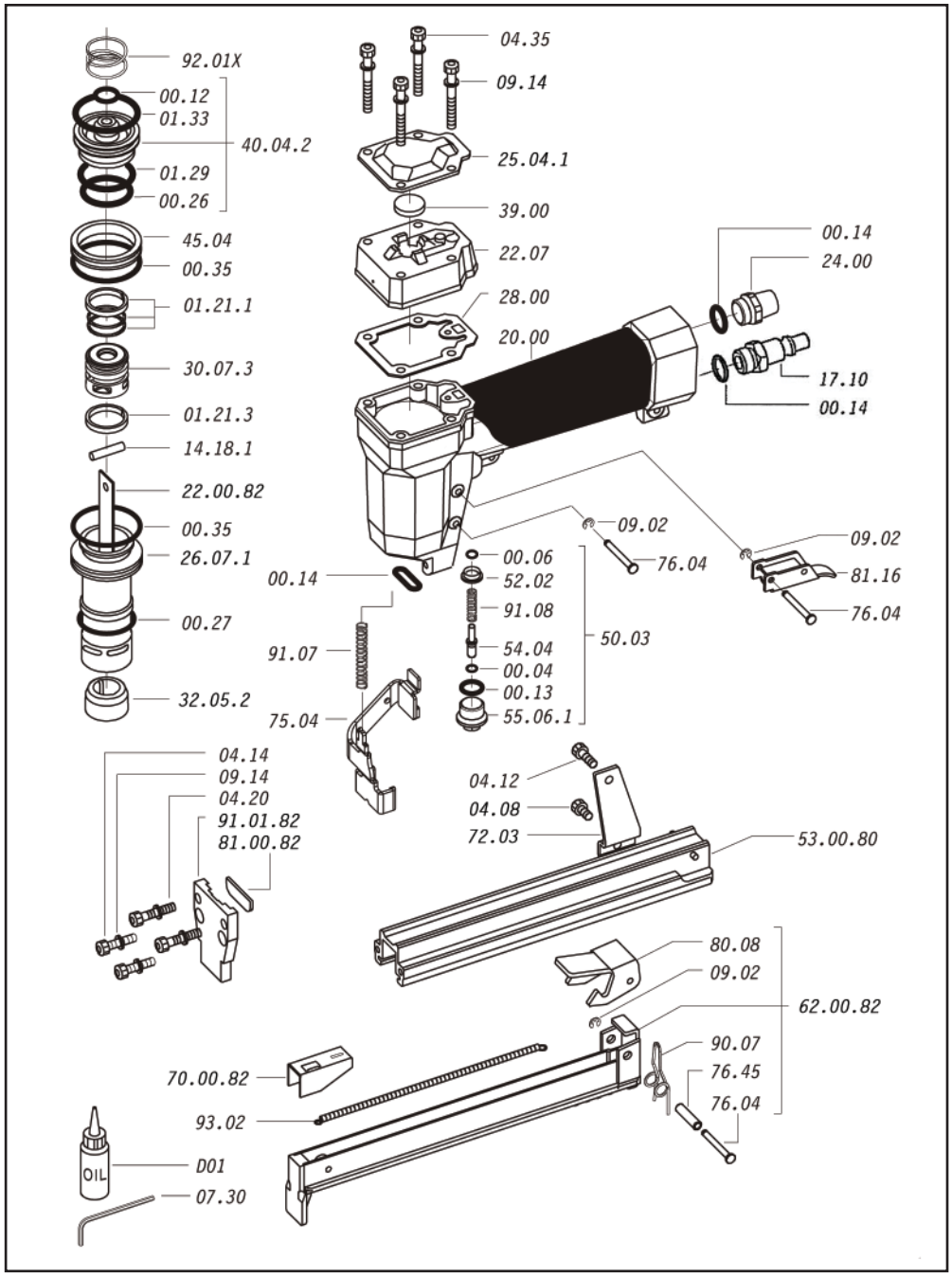
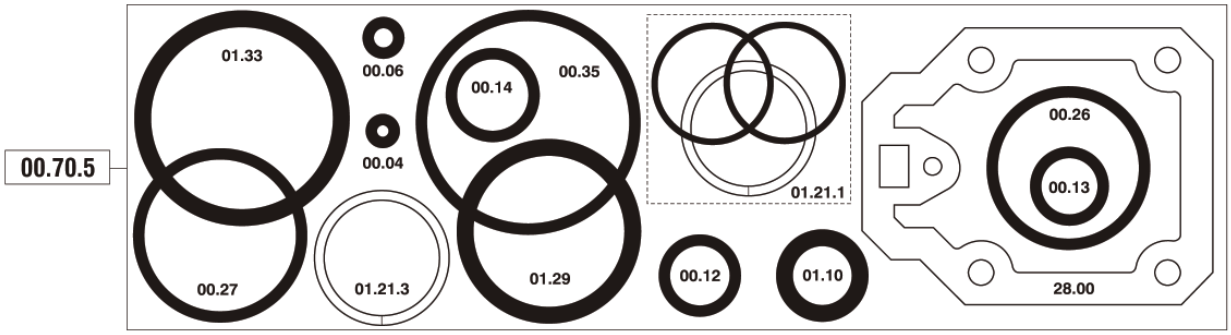
O-RINGS